USER MANUAL

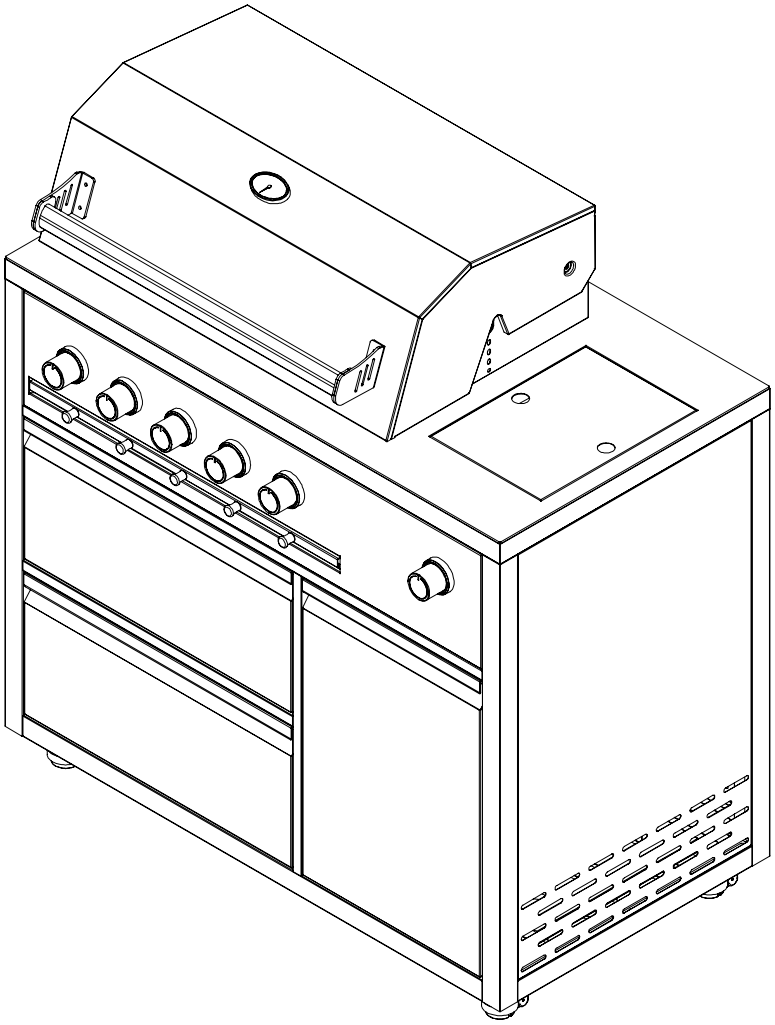

Description: Outdoor Barbecue Gas Grill
Article number: TE002 A01

Thank you for purchasing this product!









Technical Specifications

CE 25 0051

Product name	Gas Berbeque for outdoor use		
Model Number	TE002 A01		
Appliance Category	I3+(28-30/37)	I3B/P(30	I3B/P(50)
Gas and Supply Pressure	Butane(G30) at (28-30)mbar Propane(G31) at 37 mbar	Butane(G30) Propane(G31) at (28-30) mbar	Butane(G30) Propane(G31) at 50 mbar
Country Code	BE, CH, CY, CZ, ES, FR, GB, GR, IE, IT, LT, PT, SI	BG, CY, CZ, DK, EE, FI, GR, HR, HU, IT, LT, NL NO, RO, SE, SI, TR	AT, DE, CH
Main Burner Injector Size	0.99mm		0.85mm
Side Burner Injector Size	0.89mm		0.79mm
Main Burner Heat Input (Hs)	4 kW	4 kW	4 kW
Side Burner Heat Input (Hs)	3.5 kW	3.5 kW	3.5 kW
Total Nominal Heat Input (Hs)	23.5 kW (G30: 1710 g/h, G31: 1681 g/h)		
Electonic Ignitor	DC 1.5V (AA-battery) X1		
Knob LED backlight	DC 1.5V (AA-battery) X4		
Destination country	EU countries listed in EN 437		
Dimensions	W 1100 × D 649 × H 1224 mm		
Material	Countertop: Stainless Steel 304, Frame: Stainless Steel 430 (powder-coated)		
Burners	5 main burners, 1 side burner		
Ignition System	Pulse electric ignition (battery-powered)		
Gas Consumption	G30: approx. 1709 g/h, G31: approx. 1679 g/h		
Regulator Requirement	EN 16129 compliant		
Additional Features	LED lighting on control knobs, Flame supervision device on side burner		
Certification	CE marked according to Gas Appliance Regulation (EU) 2016/426 Tested to EN 498:2012 and EN 484:2019		

Safety Overview

- For **outdoor use only** in well-ventilated areas (minimum 25% open wall surface).
- **Do not use indoors** – risk of carbon monoxide poisoning.
- **Hot surfaces and open flames** – keep children, pets, and vulnerable individuals at a safe distance.
- **Do not leave the grill unattended** while in operation.
- **Close the gas valve after use** and before moving the appliance.
- **Never move the grill while burners are lit.**
- Maintain a **minimum clearance of 3 meters** from flammable materials, buildings, or vegetation.
- Use only **approved regulators and hoses** complying with EN 16129.
- Ensure **proper assembly and leak testing** before first use.
- **Read the full instructions** before installation and use.
- **Do not cover ventilation openings** or obstruct airflow around burners.
- **Do not use charcoal, wood, or other solid fuels** in this appliance.

Important Safety Information – For Outdoor Use Only

1. **Read all instructions carefully** before installing or operating the appliance. Retain this manual for future reference.
2. **Warning:** Accessible parts may become extremely hot during use. Keep children and vulnerable individuals at a safe distance.
3. **Always close the valve** of the gas tank or regulator after use, and before moving the appliance.
4. **Do not move the grill** while it is in operation.
5. Use only in **open or well-ventilated spaces.** Enclosed areas are strictly prohibited due to risk of carbon monoxide poisoning.
6. Maintain a **minimum clearance of 1.5 meters** from flammable objects, buildings, or vegetation (as per supplier specification).
7. **Do not obstruct ventilation openings** in the appliance housing.
8. **Do not use charcoal, wood, or other solid fuels** in this appliance.

Gas Installation and Handling

9. Always change the gas cylinder in a well-ventilated area, away from ignition sources such as candles, cigarettes, or open flames.
10. Ensure the regulator seal is properly fitted and functioning.
11. Close the gas supply valve after each use.
12. Perform a **leak test** every time the gas cylinder is connected (see Leak Test section).
13. Inspect the hose monthly and whenever the cylinder is changed. Replace it if there are signs of wear, cracking, or damage.
14. Use only **flexible hose ≤ 1.5 m** and regulator that complies with **EN 16129.**
15. Keep the fuel hose away from heated surfaces and position it to avoid tripping hazards.

Fire and Burn Safety

16. Warn children and adults about hot surfaces to prevent burns or clothing ignition.
17. Supervise young children near the appliance at all times.
18. Do not hang clothing or place flammable materials on or near the appliance.
19. Maintain a safe distance and never leave the grill unattended while in use.
20. Never use gasoline, kerosene, or other liquid fuels to ignite burners.
21. Allow the appliance to cool completely before touching or moving it.

Gas Cylinder Handling

- Always store and use the gas cylinder in an upright position.
- Keep cylinders outdoors in a well-ventilated area, away from heat sources and out of reach of children.
- Do not expose cylinders to temperatures above 50°C.
- When not in use, disconnect the cylinder from the appliance and replace the protective cap.
- Use only cylinders that meet local legal requirements and match the appliance's specifications (recommended size: approx. 580 mm height, 310 mm diameter).
- Never move the cylinder during operation.
- If installed in a compartment, ensure effective ventilation:
  – Upper vent opening: at least 1/20th of the compartment floor area.
  – Lower vent opening: at least 1/50th of the compartment floor area.
- Never use matches, lighters, or open flames to check for leaks.

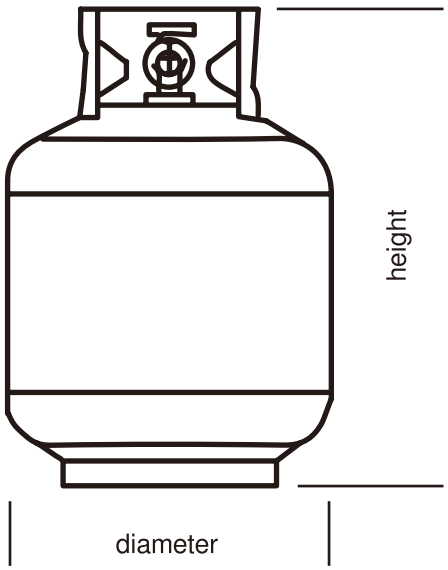

Specifications

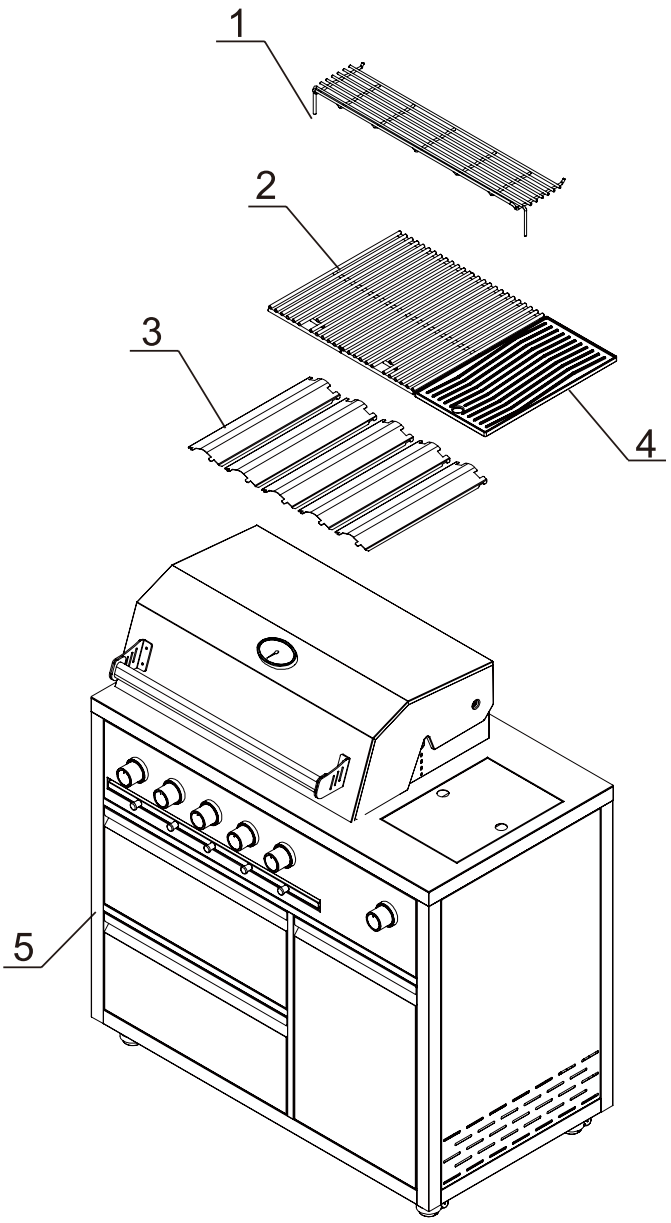

NR.	Part	Qty
1	Perforated heat plate	1 pc
2	Flat plates	3 pc
3	Grill grates	5 pc
4	Large bottom plate	1 pc
5	Grill body with lid and control panel	1 pc

Additional: Regulator with hose (EN 16129 compliant),
battery for ignition (AA, not included)

Installation Instructions

Before you start:

• Carefully unpack all components and verify that all listed parts are present and undamaged.
• Do not attempt to assemble the product if any part is missing or defective—contact customer service for assistance.
• Perform assembly on a flat, stable surface.
• Keep children away during assembly.

Step-by-Step Assembly

1. Place the **grill body (Part 5)** on a flat, stable surface.
2. Install the **bottom plate (Part 4)** inside the grill body.
3. Position the **flat plates (Part 2)** as heat shields above the burners.
4. Place the **perforated plate (Part 1)** in its designated position (usually above burners for heat distribution).
5. Install the **grill grates (Part 3)** on top of the firebox.
6. Connect the **regulator and hose** to the gas cylinder:
- Ensure all control knobs are in the **OFF** position.
- Tighten the regulator securely to the cylinder valve.
7. Insert the **AA battery** into the ignition module (see Battery Installation section).
8. Perform a **leak test** before first use (see next section).

Battery Installation – Ignition System

The ignition module requires **one AA battery** (not included).

Steps to Install the Battery

1. Ensure all **control knobs are in the OFF position.**
2. Locate the **ignition button** on the control panel.
3. Unscrew the **push-button cap** to access the battery compartment.
4. Insert **one AA battery**, observing correct polarity (+ / –).
5. Replace the cap securely.
6. Remove the battery if:
- It is depleted.
- The grill will be unused for an extended period.

Important:

• Do not use rechargeable batteries unless specified by the manufacturer.
• Keep batteries out of reach of children.
• Dispose of used batteries according to local regulations (see Environmental Information section).

Leak Test Instructions

Before lighting the grill, always perform a leak test when:
• Connecting a new gas cylinder.
• Replacing the regulator or hose.
• After long storage periods.

How to Perform the Leak Test
1. Ensure all **control knobs are in the OFF position.**
2. Prepare a leak solution: **mix liquid dish soap with water** (ratio approx. 1:3).
3. Apply the solution to:
- Connection between **gas cylinder valve and regulator**.
- Connection between **hose and appliance gas inlet.**
- Connection between **regulator and hose.**
4. **Observe for bubbles:**
- **No bubbles:** Connection is secure.
- **Bubbles appear:**
  - Tighten the connection and repeat the test.
  - If bubbles persist, **do not use the appliance.** Contact a qualified technician or replace the defective part.
5. **Never use matches, lighters, or open flames** to check for leaks.
6. Conduct the test **outdoors in a well-ventilated area**, away from ignition sources.

Important:
• Do not block venturi openings during assembly or operation (as stated in supplier manual).
• If a leak cannot be stopped, disconnect the gas supply immediately.

Lighting Instructions

Preparation
1. Ensure all control knobs are in the **OFF (O)** position.
2. Open the lid completely.
3. Connect the regulator to the gas cylinder and then to the barbecue. Turn the gas supply **ON** at the cylinder. Check all connections for leaks using a soapy water solution.

Igniting the Main Burner
4. Push down the control knob and hold it while turning anti-clockwise to the **HIGH** position.
5. While holding the knob down, press the ignition button until a clicking sound is heard and the burner lights.
6. If the burner does not ignite:
- Turn the knob back to **OFF (O)**.
- Wait 5 minutes and repeat steps 4–5.
7. Adjust the flame by turning the knob to **HIGH** or **LOW** as desired.

Igniting the Side Burner
• The side burner may take longer to ignite due to the gas circuit length.
• Follow the same procedure as above, but keep the knob pressed for at least 5 seconds after ignition.

Match Lighting
1. Follow steps 1–3 above.
2. Insert a lit match into the match holder and guide it to the lighting hole near the burner.
3. Push down and turn the knob to **HIGH ( )** until the burner ignites.

Turning Off
1. Turn all control knobs to **OFF (O).**
2. Close the gas cylinder valve and disconnect the regulator.

Lighting Your Barbecue – Safety Notes

- Always keep the lid **open when lighting.**
- Follow all lighting instructions carefully to avoid **fire or explosion hazards.**
- Always use **protective gloves** when handling hot components.
- Ensure there are **no overhead obstructions** and maintain a minimum clearance of **1.5 m** from the sides and rear of the appliance.
- Place the barbecue on a **level, stable, non-flammable surface.**
- Protect the appliance from **direct draughts** and trickling water.
- Do not modify the appliance. **Repairs and maintenance must only be carried out by a registered service engineer.**
- **Do NOT let children operate or play near the grill.**
- **Do NOT use charcoal or briquettes in a gas grill.**
- **Do NOT light or use the side burner with the lid closed** – this is hazardous.
- The side burner is designed for **pot/pan with diameter 160–220 mm only**. It cannot be used as a work table.
- Do not place any items on the side burner while it is not in use.
- The wooden side shelf is for placing spices only. **Maximum weight: 5 kg.**

Cleaning and Care

Always perform cleaning and maintenance only when the barbecue is completely cool and the gas supply is turned OFF at the cylinder.

General Guidelines

- Remove grease and smoke deposits regularly. Interiors of gas grills are not painted and should **never** be painted.
- Use a mild detergent and warm water or a grill cleaner with a soft brush. Rinse thoroughly and allow to air dry.
- **Do NOT** use caustic oven cleaners, abrasive pads, or flammable cleaners—they can damage surfaces and create fire hazards.

Surface Care

- **Plastic parts:** Wash with warm soapy water and dry.
- **Porcelain surfaces:** Wipe with baking soda solution or a non-abrasive cleaner. Avoid scouring powders.
- **Painted surfaces:** Clean with mild detergent and warm water. Dry with a soft cloth.
- **Stainless steel:** Use mild detergent and warm water. Apply stainless steel protection (e.g., WD-40) to prevent rust.
- **Cooking grids:** Use mild soapy water and a non-abrasive scouring pad for stubborn stains.

Burner Assembly Cleaning

1. Turn all control knobs and the gas cylinder **OFF**.
2. Remove cooking grates, grease tray, and burner caps.
3. Detach burners by removing screws.
4. Clean burner tubes inside and out using a flexible brush (never brass).
5. Remove any blockages from ports with a wire or pin.
6. Inspect burners for cracks or corrosion—replace if damaged.
7. Reinstall burners and check alignment with gas valves.

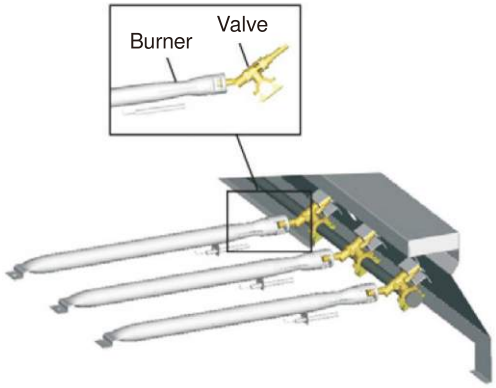

Preventing Blockages

• Spiders and insects can nest inside burner tubes, causing blockages and flashback fires.
• Inspect burners before each season and after long storage.
• Clean burner tubes thoroughly with a flexible brush.



Routine Maintenance

• **Initial cleaning:** Before first use, wash the grill thoroughly.
• **Regular cleaning:** After each use, clean grids and empty grease tray.
• **Annual service:** At least once per year, check:
- Hose and regulator for leaks
- Burner alignment and condition
- Ignition system functionality
- Overall safety and performance

Caution:
Obstructions in burner tubes can cause flashback fires. Always inspect and clean regularly.

Storage and Seasonal Care

Proper storage will extend the life of your barbecue and maintain safe operation.

Before Storage
• Turn all control knobs to **OFF (O)** and close the gas cylinder valve.
• Disconnect the regulator and hose from the cylinder.
• Allow the barbecue to cool completely before covering or moving.

Covering
• Use a **weather-resistant outdoor cover** to protect the appliance from rain, dust, and debris.
• Ensure the barbecue is **completely dry** before covering to prevent rust and corrosion.

Indoor Storage
• If storing indoors, **remove the gas cylinder** and keep it outdoors in a well-ventilated area.
• Never store the cylinder in a basement, garage, or any enclosed space.

Seasonal Maintenance
• Before long-term storage, clean all surfaces thoroughly:
- Remove grease and food residue from cooking grids and burners.
- Empty and clean the grease tray.
• Inspect burners, hoses, and connections for wear or damage. Replace if necessary.
• Apply stainless steel protection to metal surfaces to prevent rust.

Before Reuse
• Perform a full inspection:
- Check hose and regulator for leaks.
- Ensure burners are free from blockages (spiders and insects can nest inside tubes).
- Test ignition system for proper operation.

Warning:
Never store the barbecue with the gas cylinder attached in an enclosed space.
Always follow local regulations for gas cylinder storage.

General Troubleshooting

Problem	Possible Cause	Prevention / Solution
Burner(s) will not light	No gas flow	Check if LP tank is empty. Turn the coupling nut about one-half to three-quarters additional turn until solid stop. Tighten by hand only—do not use tools.
	Coupling nut and regulator not fully connected	Tighten connection securely.
	Obstruction of gas flow	Clear burner tube.
	Burner not engaged properly	Reinstall burner and valve assembly.
Sudden drop in gas flow or low flame	Out of gas	Check LP tank and refill if necessary.
	Excess flow valve tripped	Turn all knobs OFF, wait 30 seconds, then relight. If still low, disconnect regulator, reconnect, and retry.
Flames blow out	High or gusting winds	Turn front of grill to face wind or increase flame height.
	Low on LP gas	Refill LP tank.
Flare-up	Grease buildup	Clean grill. Trim excess fat from meat before grilling.
Persistent grease fire	Grease trapped by food buildup	Turn knobs OFF, turn gas OFF at LP tank. After grill cools, remove and clean all parts.
Flashback (flame in burner tube)	Burner and/or burner tubes blocked	Turn knobs OFF, turn gas OFF at LP tank. After grill cools, remove and clean burner tubes.

Ignition System Troubleshooting

Problem	Possible Cause	Check Procedure	Prevention / Solution
No sparks appear at any electrodes when ignition button is pushed; no noise from spark module	Battery not installed properly	Check battery orientation	Install battery correctly (+/- alignment).
	Dead battery	Has battery been used previously?	Replace battery with new AA alkaline battery.
	Button assembly not installed properly	Check threads and movement	Unscrew button cap, reinstall, ensure proper alignment.
	Faulty spark module	If no sparks with new battery and good wiring	Replace spark module assembly.
No sparks at electrodes when ignition switch is pushed, noise can be heard from spark module	Output lead connections not complete	Are output connections on and tight?	Remove and reconnect output connections at module and electrodes.
Sparks are present but not at all electrodes and/or not at full strength tube)	Arcing to grill away from burner(s)	If possible, observe grill in dark location	If sparks arc away, insulation may be damaged. Replace wires.
	Weak battery	All sparks present but weak	Replace battery with new AA alkaline battery.
	Electrodes are wet	Moisture accumulation	Use paper towel to remove moisture.

Warranty & Service Contact

Your outdoor gas grill is covered against defects for a period of 12 months for parts and labor, repair or replacement.

This warranty excludes surface rust and damage caused by abuse or neglect.

Conditions of Warranty

• The appliance must be operated and maintained according to the instructions supplied in this manual.
• Any repairs not under warranty must be performed by an authorized service agent.
• Use of non-original parts will void this warranty.
• Installation must conform to applicable Gas, Electrical, and Building standards and local codes.
• If the appliance is converted to natural gas (where applicable), it must be installed by a licensed gas fitter.

To Make a Claim

• Provide proof of purchase and contact your dealer or distributor.
• Warranty covers manufacturer defects in materials, workmanship, and finish under normal use.
• This warranty does not cover damage caused by misuse, neglect, improper installation, or unauthorized modifications.
• Transportation costs, removal, and reinstallation are not covered.

Exclusions

• Rust, corrosion, or discoloration caused by heat, abrasive cleaners, or environmental conditions.
• Damage from accidents, misuse, or failure to follow instructions.
• Consumable items such as batteries are not covered.

Environment and recycling

Disposal and Recycling (WEEE) This product contains electrical components (ignition system and LED lighting) and must not be disposed of with unsorted municipal waste. The crossed-out wheeled bin symbol indicates that the product requires separate collection. Please dispose of waste equipment and used batteries at a designated collection point in accordance with local regulations.

Country of Manufacture: China